# IJK BEARING COMPANY

## SIGMA ESA 20 0414 thrust ball bearings

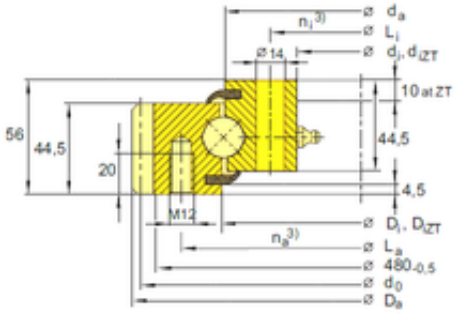


ESA 20 0414 Bearing 2D drawings and 3D CAD models

**Bearing No. ESA 20 0414**

| | |
|---|---|
| Bore Diameter | 342 mm |
| Outer Diameter | 503,3 mm |
| d | 342 mm |
| D | 503,3 mm |
| Da | 503,3 mm |
| Z | 99 mm |
| m | 5 mm |
| di | 342 mm |
| diZT | 344 mm |
| Di | 415,5 mm |
| DiZT | 417 mm |
| da | 412,5 mm |
| La | 455 mm |
| na | 20 mm |
| ni | 24 mm |
| Li | 368 mm |
| d0 | 495 mm |